

White Goods

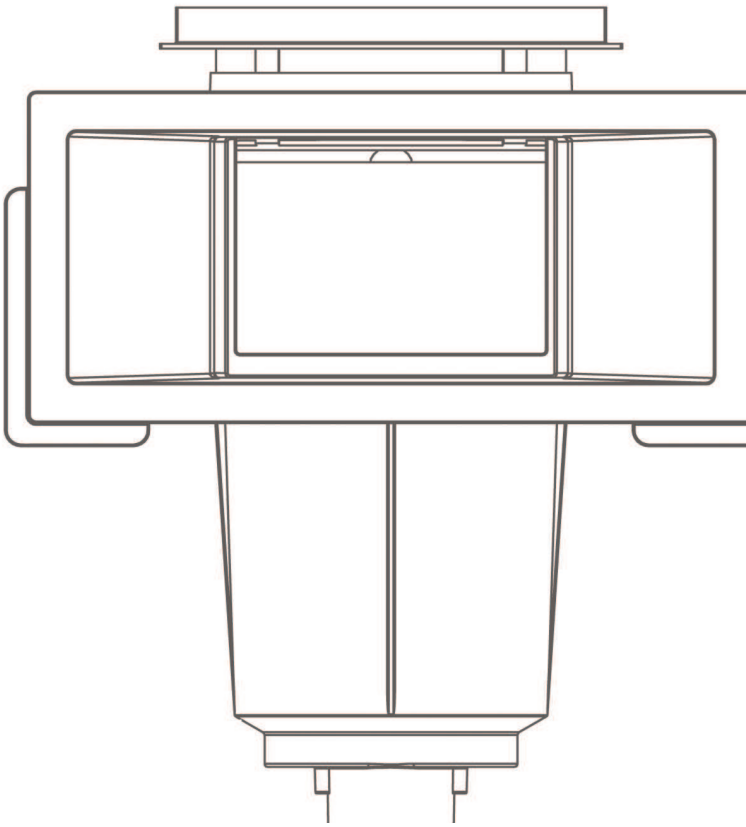

The thru-wall skimmer is made of non-corrosive ABS, a 7 -13/16" weir with stainless steel spring for providing a large capacity 163 cubic inches baskets and Multi-channel connection. Many connect ways for adaptors for your choices (slip and internal screw connect way).



91026

Application

- PVC vinyl liner pool

Features

- Durable corrosion-proof unibody construction
- Adjustable deck collar and access square cover
- Self-adjusting weir loaded with stainless steel spring
- Large debris basket and multiple plumbing connections for easier connections
- Adjustable deck collar vertical height is 2.4"

Dimensions

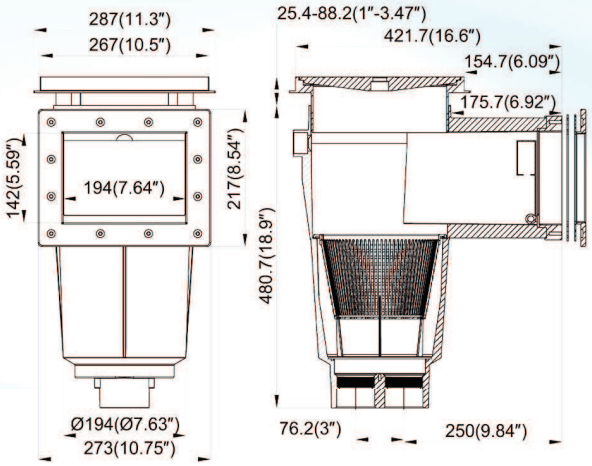

Pipz Size

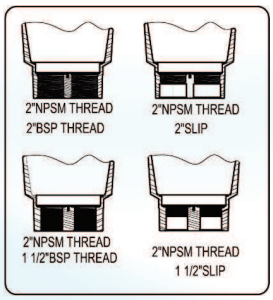

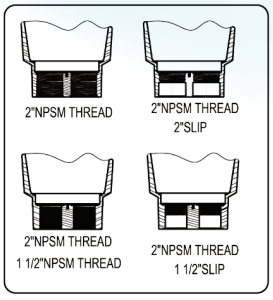

Model Number	Pipe Size	Application	Weight Kg (lbs)	Carton Dimension (cm)
91026		PVC Pool	4(8.8)	44x30x49

SPLASH Splash Pool Appliance

The thru-wall skimmer is made of non-corrosive ABS, a 7 -13/16" weir with stainless steel spring for providing a large capacity 163 cubic inches baskets and Multi-channel connection. Many connect ways for adaptors for your choices (slip and internal screw connect way)



91027

Application

- Concrete Pools

Features

- Durable corrosion-proof unibody construction
- Adjustable deck collar and access square cover
- Self-adjusting weir loaded with stainless steel spring
- Large debris basket and multiple plumbing connections for easier connections
- Adjustable deck collar vertical height is 2.4"

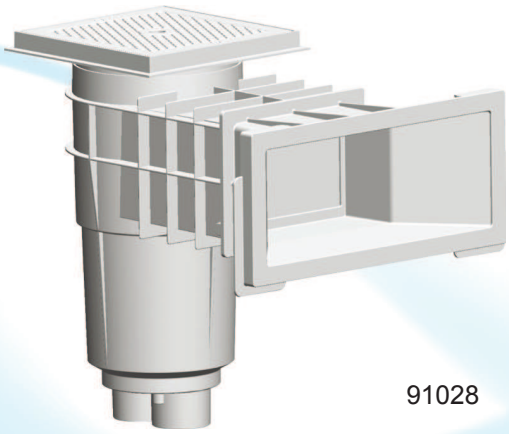

91028

Dimensions

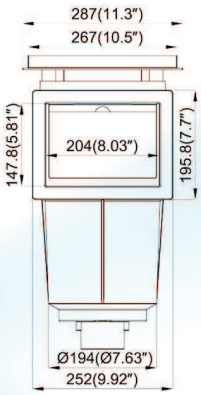

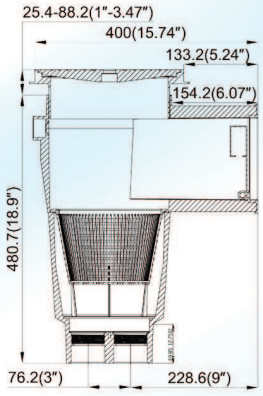

Pipz Size

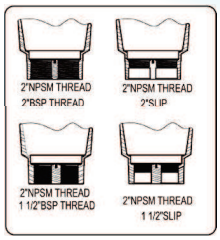

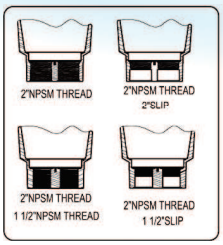

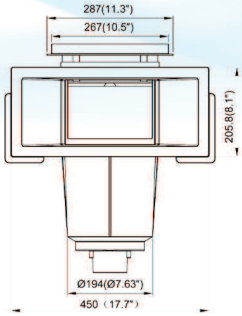

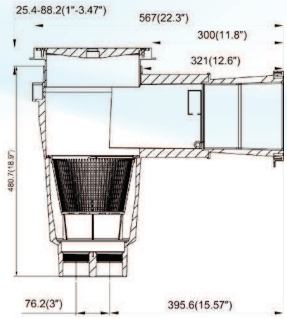

Model Number	Pipe Size	Application	Weight Kg (lbs)	Carton Dimension (cm)
91027		Concrete pool	3.5(7.7)	42x30x49
91028		Concrete pool	4.3(9.5)	59x49x49

SPLASH Splash Pool Appliance

The thru-wall skimmer is made of non-corrosive ABS, a 7 -13/16” weir with stainless steel spring for providing a large capacity 163 cubic inches baskets and Multi-channel connection. Many connect ways for adaptors for your choices (slip and internal screw connect way)



91001



91002



91029

Applications & Features

- Above-ground pools
- Large debris collection basket
- Top and front basket access
- One piece body construction
- Snap-in and removable weir
- 1 1/2" female straight pipe threads
- Quick disconnect pipe connection
- Compatible with wide top seat pools

Dimensions

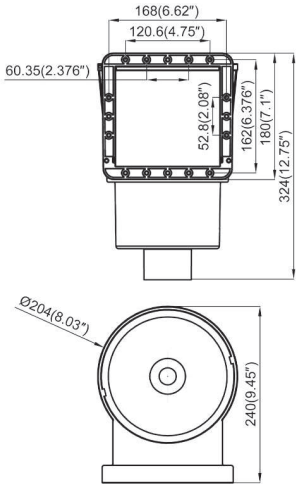

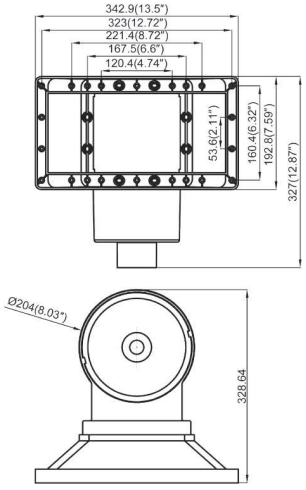

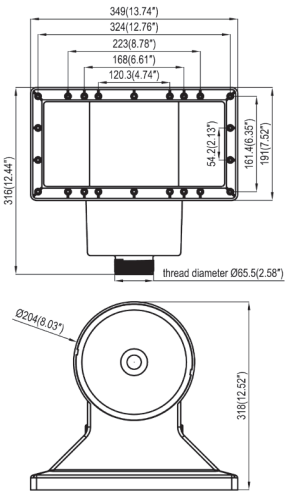

Model Number	description	Weight Kg (lbs)	Carton Dimension (cm)
91001	Concrete thru-wall skimmer available	1.88(4.1)	24x22x32.5
91002	Concrete wide mouth thru-wall skimmer available	2.5(5.5)	36.5x21x34
91029	One piece wide mouth thru-wall skimmer	2.1(4.6)	37x32x34