CODELINE® - OCTA 80S SERIES

8 INCH SIDE ENTRY MEMBRANE HOUSING WITH OCTA TECHNOLOGY FOR RO APPLICATION

MEMBRANE HOUSING DATASHEET

ARTICLE CODE: 80S15, 80S30, 80S45, 80S60, 80S100, 80S120, 80S15 (NC), 80S30 (NC), 80S45 (NC), 80S60 (NC)

GENERAL INFORMATION

Codeline OCTA 80S Series is membrane housing of 8" diameter with side entry design with OCTA Technology. This is used for commercial, municipal and industrial RO applications. Vessel models are available upto a maximum operating pressure of 150 PSI, 300 PSI, 450 PSI, 600 PSI, 1000 PSI & 1200 PSI with multiport connectivity. These are made up of epoxy / glass composite to meet the demands of long term and continuous use in RO processes. Codeline OCTA 80S Series vessels can accommodate any standard* 8" membrane element.

* Standard element length = 40 " long

CERTIFICATIONS

- Codeline 80S non-coded: CE certified NSF certified
- Codeline 80S coded: ASME code compliant, CE certified, NSF certified
- Contact us for DWI certified products

THE OCTA TECHNOLOGY - AN OVERVIEW

The Background: The conventional internal shape for a membrane housing is considered as a round shape, but use of a round shape with multiple side ports provides a higher probability of side port leakage. Hence, the research background was that how to fit a flat surface in a circular membrane housing with multiple side ports.

The Research: Research with various possibilities proved that an OCTAGON is the best shape to solve the problem of fitting of flat surface in a circular membrane housing. Hence, the technology named after OCTAGON as OCTA Technology.

The Theory & Explanation: Inside of industrial membrane housing made up of OCTAGONAL SHAPE can accommodate multiple side ports with the best fit surface. The reasons are explained as shown on the pictures.

The Conclusion: Successful execution showed that an Octagon, besides providing the best fit, would also allow for multiple sealing surfaces, each at certain intervals along with side port mounting. Apart from the above it will also provide the benefits like easy on-site service & maintenance with quick locking mechanism along with improved head sealing and integrally wound locking groove. Thus, OCTA Technology sets a benchmark for manufacturing a membrane housings series using the unique "Octagonal Groove Forming Technique" and applicable for 8" membrane housings only.

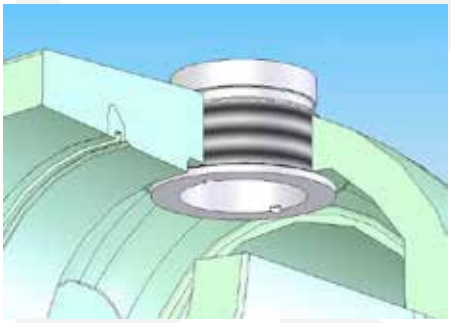

Flat surface formed in the vessel shell - reduces counter boring

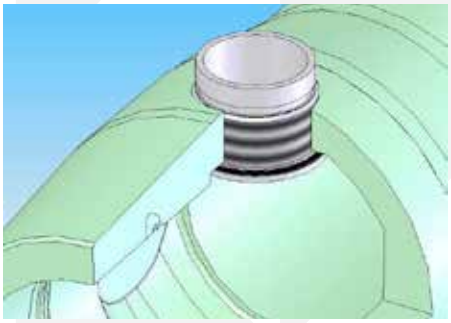

Seal seated against a flat surface



Threaded side port; seal seating on side port

CODELINE® - OCTA 80S SERIES

8 INCH SIDE ENTRY MEMBRANE HOUSING WITH OCTA TECHNOLOGY FOR RO APPLICATION

MEMBRANE HOUSING DATASHEET

UNIQUE BENEFITS

- Minimized Leakage: The octagonal shape which is integrally formed provides a flat sealing surface for superior and reliable sealing of side ports
- Easy Service & Maintenance: The threaded side ports are easy to mount and allows quick & easy onsite maintenance and replacements reducing downtime
- Quick Locking Mechanism: The user friendly Quick Lock System eliminates the requirement of special tools for removal and lets easy access the membrane quickly
- Improved Head Sealing: Head seal which is captured in the head / sealing plate gives better sealing and avoids head seal to roll eliminating head leak defect
- Integrally Wound Locking Groove: Integrally wound locking groove gives enhanced end margin strength for better performance
- Flexibility in permeate piping: Standard permeate ports can be customised as special requirements
- Reduced system cost: Availability of Multiple Side port options for high flow rate cuts down the investments on expensive manifolds
- Ultrapure / Sanitary Applications: 80S Serie can accommodate optionally a special designed sanitary connection for the coded models

UNIQUE FEATURES

- Mirror Finish ID for easy & quick loading and unloading of membranes
- Multi-porting options available with 1.5", 2.0" & 2.5" diameter for connecting vessels to each other
- Quick lock head retention system for quick access to membranes
- Exteriors coated with high gloss polyurethane paint for UV resistance
- Head seal is captured, hence doesn't roll during head assembly fitment
- Compatible for using in all water type application
- Available in ASME certified & CE marked models
- Available in ASME code compliant and non-coded models

CODELINE 80S SERIES SPECIFICATION*

Code Compliant

MODEL NUMBER	DRAWING NUMBER	MAX. OPERATING PRESSURE	MAX. OPERATING TEMPERATURE	QUALIFICATION PRESSURE	ELEMENT LENGTH
CODELINE 80S15	99159	150 PSI / 10 Bar	190 °F / 88 °C	900 PSI / 62 Bar	1-8
CODELINE 80S30	99160	300 PSI / 20 Bar	190 °F / 88 °C	1800 PSI / 124 Bar	1-8
CODELINE 80S45	99161	450 PSI / 31 Bar	190 °F / 88 °C	2700 PSI / 186 Bar	1-8
CODELINE 80S60	99162	600 PSI / 41 Bar	190 °F / 88 °C	3600 PSI / 248 Bar	1-8
CODELINE 80S100	99163	1000 PSI / 68 Bar	150 °F / 66 °C	6000 PSI / 413 Bar	1-8
CODELINE 80S120	99164	1200 PSI / 82 Bar	150 °F / 66 °C	7200 PSI / 496 Bar	1-8

Non-coded**

MODEL NUMBER	DRAWING NUMBER	MAX. OPERATING PRESSURE	MAX. OPERATING TEMPERATURE	QUALIFICATION PRESSURE	ELEMENT LENGTH
CODELINE 80S15 NC	99171	150 PSI / 10 Bar	190 °F / 88 °C	900 PSI / 62 Bar	1-8
CODELINE 80S30 NC	99172	300 PSI / 20 Bar	190 °F / 88 °C	1800 PSI / 124 Bar	1-8
CODELINE 80S45 NC	99173	450 PSI / 31 Bar	190 °F / 88 °C	2700 PSI / 186 Bar	1-8
CODELINE 80S60 NC	99174	600 PSI / 41 Bar	190 °F / 88 °C	3600 PSI / 248 Bar	1-8

Any make of 8" nominal diameter spiral-wound element is easily accommodated.

* Specifications are subjected to change without prior notice (for more details refer to model specific engineering drawings)

** 80S Non-coded series cannot be ASME stamped

CODELINE® - OCTA 80S SERIES

8 INCH SIDE ENTRY MEMBRANE HOUSING WITH OCTA TECHNOLOGY FOR RO APPLICATION

MEMBRANE HOUSING DATASHEET

EXPLODED VIEW & DETAILS (CODED MODELS)

A GENERIC VIEW FOR VISUAL REFERENCE ONLY

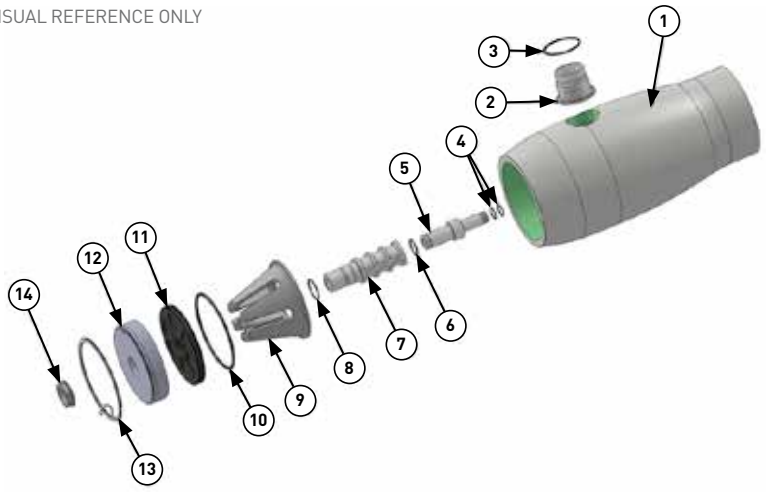

PARTS TABLE

DRG REG	QTY	DESCRIPTION	MATERIAL	80S15 PART NUMBER	80S30 PART NUMBER	80S45 PART NUMBER	80S60 PART NUMBER	80S100 PART NUMBER	80S120 PART NUMBER
1	1	Shell	Filament Wound Epoxy / Glass composites. Head Locking grooves integrally wound in place.	Order section	Order section	Order section	Order section	Order section	Order section
2	AR	F / C Port	CF3M / CD3MWCuN	CF3M	CF3M	CF3M	CF3M	CD3MWCuN	CD3MWCuN
3	AR	F / C Port Seal	Ethylene Propylene	As required	As required	As required	As required	As required	As required
4	4	PWT Seal	Ethylene Propylene - O Ring	As required	As required	As required	As required	As required	As required
5	2	Adapter	Engineering Thermoplastic	As required	As required	As required	As required	As required	As required
6	2	Adapter Seal	Ethylene Propylene - O Ring	52245	52245	52245	52245	52245	52245
7	2	Permeate Port	Engineering Thermoplastic	96162	96162	96162	96162	96162	96162
8	2	Permeate Port Seal	Ethylene Propylene - O Ring	45312	45312	45312	45312	45312	45312
9	1	Thrust Cone	Engineering Thermoplastic	96163	96163	96163	96163	96163	96163
10	2	Head Seal	Ethylene Propylene - O Ring	96000	96000	96000	96000	96000	96000
11	2	Sealing Plate	Engineering Thermoplastic	96160	96160	96160	96160	96160	96160
12	2	Bearing Plate	6061-T6 Aluminum Alloy - Hard Anodized	96156	96156	96157	96157	96158	96158
13	2	Retaining Ring	316 Stainless Steel	47336	47336	47336	47336	47336	47336
14	2	Port Nut	Engineering Thermoplastic	45066	45066	45066	45066	45066	45066
15*	AR	Saddle	Engineering Thermoplastic	52169	52169	52169	52169	52169	52169
16*	AR	Strap Assembly	304 Stainless Steel - PVC Cushion	45042	45042	45042	45042	45042	45042
17*	AR	Strap Screw	5/16-18 UNC, 18-8 Stainless Steel	46265	46265	46265	46265	46265	46265

* Not shown in the exploded view

CODELINE® - OCTA 80S SERIES

8 INCH SIDE ENTRY MEMBRANE HOUSING WITH OCTA TECHNOLOGY FOR RO APPLICATION

MEMBRANE HOUSING DATASHEET

EXPLODED VIEW & DETAILS (NON-CODED MODELS)

A GENERIC VIEW FOR VISUAL REFERENCE ONLY

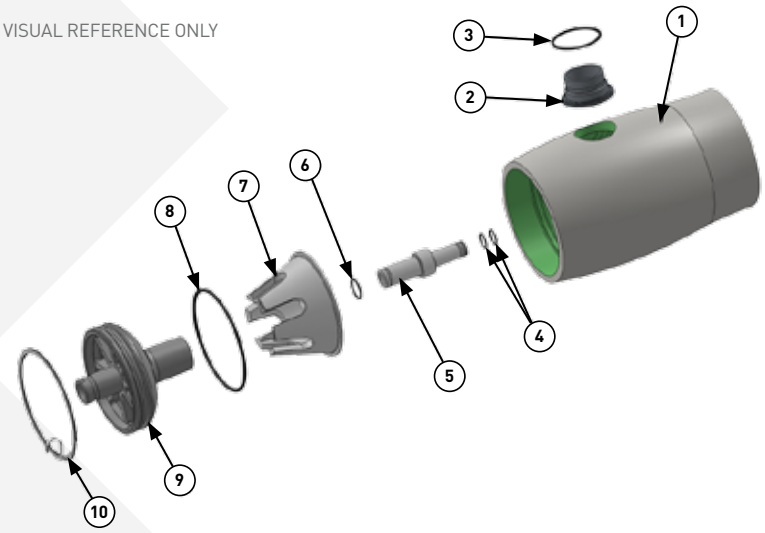

PARTS TABLE

DRG REG	QTY	DESCRIPTION	MATERIAL	80S15 NC	80S30 NC	80S45 NC	80S60 NC
				PART NUMBER	PART NUMBER	PART NUMBER	PART NUMBER
1	1	Shell	Filament Wound Epoxy / Glass composites. Head Locking grooves integrally wound in place.	Order section	Order section	Order section	Order section
2	AR	F / C Port	CF3M	As required	As required	As required	As required
3	AR	F / C Port Seal	Ethylene Propylene	As required	As required	As required	As required
4	4	PWT Seal	Ethylene Propylene - O Ring	As required	As required	As required	As required
5	2	Adapter	Engineering Thermoplastic	As required	As required	As required	As required
6	2	Adapter Seal	Ethylene Propylene - O Ring	52245	52245	52245	52245
7	1	Thrust Cone	Engineering Thermoplastic	97014	97014	97014	97014
8	2	Head Seal	Ethylene Propylene - O Ring	96000	96000	96000	96000
9	2	Elliptical Head Sub Assembly	Engineering Thermoplastic	96247	96243	96248	96244
10	2	Retaining Ring	316 Stainless Steel	47336	47336	47336	47336
11*	AR	Saddle	Engineering Thermoplastic	52169	52169	52169	52169
12*	AR	Strap Assembly	304 Stainless Steel - PVC Cushion	45042	45042	45042	45042
13*	AR	Strap Screw	5/16-18 UNC, 18-8 Stainless Steel	46265	46265	46265	46265

* Not shown in the exploded view

PENTAIR

CODELINE®
PENTAIR WATER INDIA PVT. LTD. L / 52 – 55, VERNA INDUSTRIAL ESTATE, VERNA, GOA, INDIA – 403 722 WWW.CODELINE.COM

Note: The information and data contained in this document are based on our general experience and are believed to be correct. They are given in good faith and are intended to provide a guideline for the selection and use of our products. Since the conditions under which our products may be used are beyond our control, this information does not imply any guarantee of final product performance and we cannot accept any liability with respect to the use of our products. The quality of our products is guaranteed under our conditions of sale. Existing industrial property rights must be observed.
DS CODELINE OCTA 80S SERIES EN 3915 © 2015 Pentair. All Rights Reserved.